ADVANTAGES

DOUBLE OFFSET HIGH PERFORMANCE BUTTERFLY VALVES

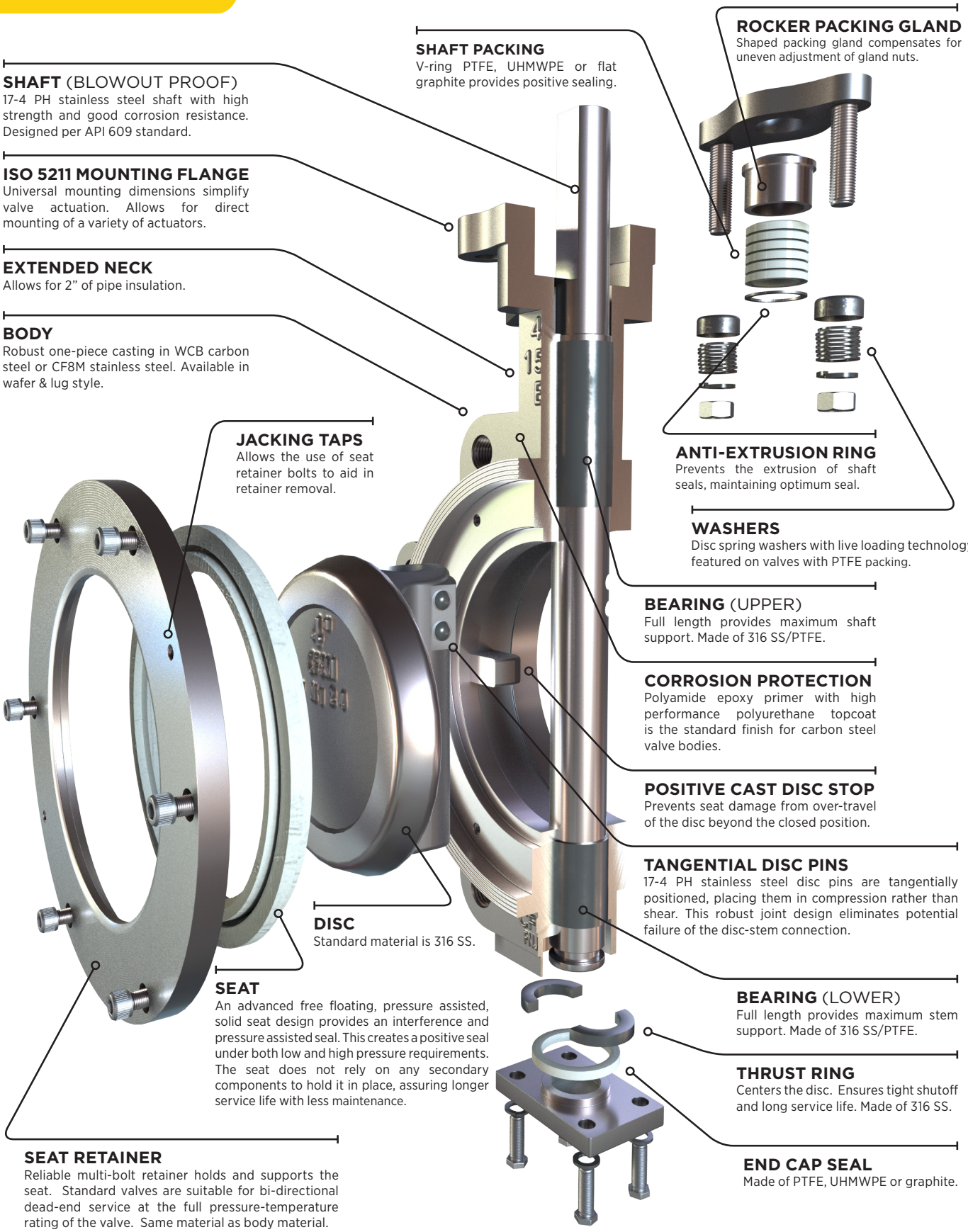

SHAFT (BLOWOUT PROOF)
17-4 PH stainless steel shaft with high strength and good corrosion resistance. Designed per API 609 standard.

ISO 5211 MOUNTING FLANGE
Universal mounting dimensions simplify valve actuation. Allows for direct mounting of a variety of actuators.

EXTENDED NECK
Allows for 2" of pipe insulation.

BODY
Robust one-piece casting in WCB carbon steel or CF8M stainless steel. Available in wafer & lug style.

SHAFT PACKING
V-ring PTFE, UHMWPE or flat graphite provides positive sealing.

ROCKER PACKING GLAND
Shaped packing gland compensates for uneven adjustment of gland nuts.

JACKING TAPS
Allows the use of seat retainer bolts to aid in retainer removal.

ANTI-EXTRUSION RING
Prevents the extrusion of shaft seals, maintaining optimum seal.

WASHERS
Disc spring washers with live loading technology featured on valves with PTFE packing.

BEARING (UPPER)
Full length provides maximum shaft support. Made of 316 SS/PTFE.

CORROSION PROTECTION
Polyamide epoxy primer with high performance polyurethane topcoat is the standard finish for carbon steel valve bodies.

POSITIVE CAST DISC STOP
Prevents seat damage from over-travel of the disc beyond the closed position.

TANGENTIAL DISC PINS
17-4 PH stainless steel disc pins are tangentially positioned, placing them in compression rather than shear. This robust joint design eliminates potential failure of the disc-stem connection.

DISC
Standard material is 316 SS.

SEAT
An advanced free floating, pressure assisted, solid seat design provides an interference and pressure assisted seal. This creates a positive seal under both low and high pressure requirements. The seat does not rely on any secondary components to hold it in place, assuring longer service life with less maintenance.

BEARING (LOWER)
Full length provides maximum stem support. Made of 316 SS/PTFE.

THRUST RING
Centers the disc. Ensures tight shutoff and long service life. Made of 316 SS.

SEAT RETAINER
Reliable multi-bolt retainer holds and supports the seat. Standard valves are suitable for bi-directional dead-end service at the full pressure-temperature rating of the valve. Same material as body material.

END CAP SEAL
Made of PTFE, UHMWPE or graphite.

MATERIALS - SOFT SEAT

CLASS 150 - 2" THRU 24", 30", 36" | CLASS 300 - 2" THRU 24" | CLASS 600 - 3" THRU 12"

STANDARD MATERIAL LIST

	PART	MATERIAL
1	Body	A351-CF8M or A216-WCB
2	Disc	A351-CF8M
3	Seat	RTFM (TFM 1700)*
4	Seat Retainer	A351-CF8M or A216-WCB
5	Seat Retainer Bolt	Stainless Steel 316
6	Stem	17-4PH
7	Disc Pin	17-4PH
8	End Cap Bolt	Stainless Steel 316
9	Washer	Stainless Steel 316
10	End Cap	A351-CF8M or A216-WCB
11	Spacer	PTFE
12	End Cap Seal	PTFE
13	Thrust Ring	Stainless Steel 316
14	Lower Bearing	Stainless Steel 316/PTFE
15	Upper Bearing	Stainless Steel 316/PTFE
16	Anti-Extrusion Ring	Stainless Steel 316
17	Stem Packing	PTFE
18	Packing Gland	Stainless Steel 316
19	Gland Nut	Stainless Steel 316
20	Washer	Stainless Steel 316
21	Disc Spring	Stainless Steel 304
22	Disc Spring Retainer	Stainless Steel 316
23	Gland Studs	Stainless Steel 316
24	Gland Plate	A351-CF8M or A216-WCB

** TFM 1700 modified PTFE is a next-generation PTFE with improved properties. Added glass further improves the seat providing greater wear resistance and a higher modulus.*

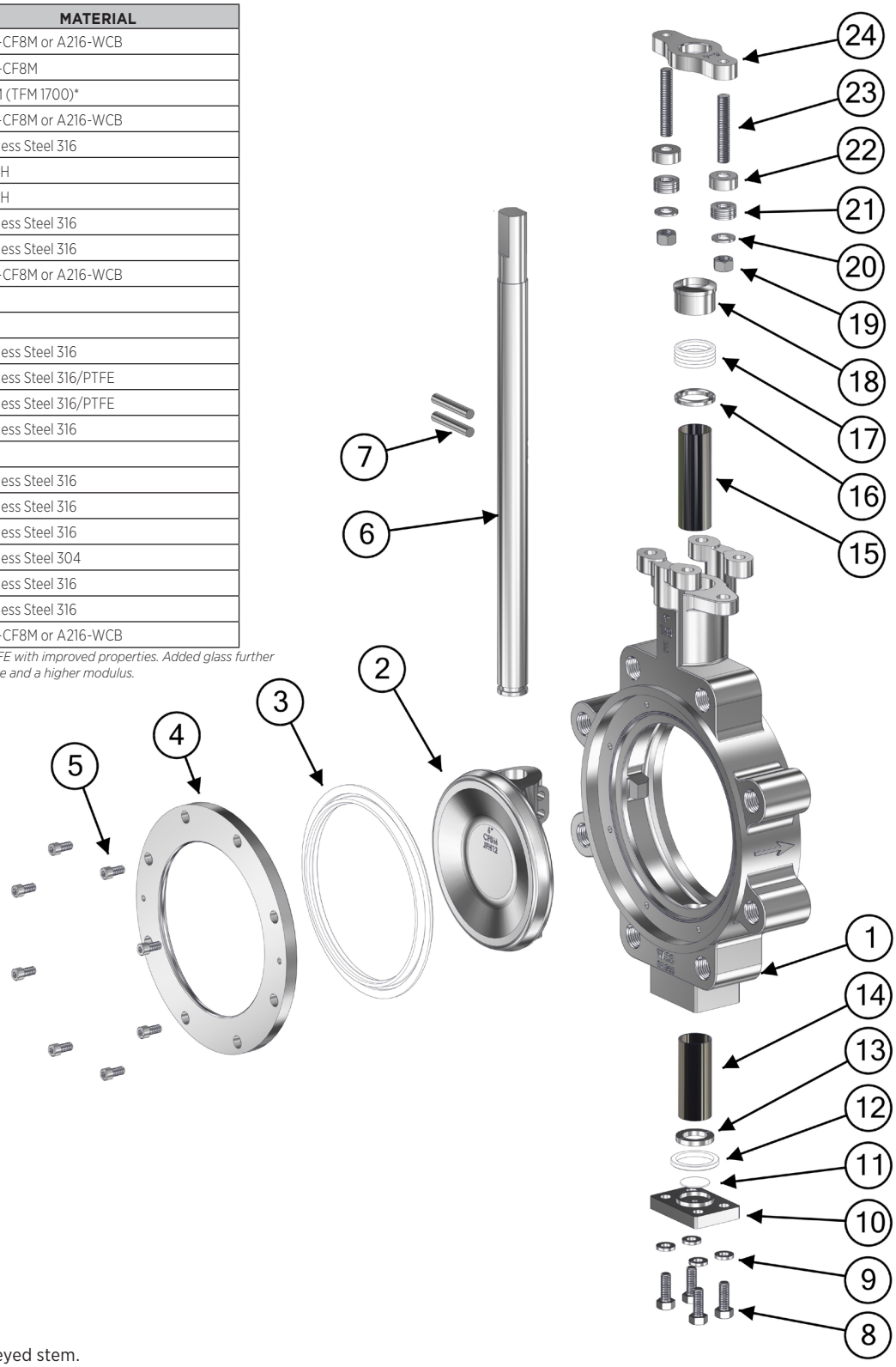

EXPLODED VIEW

LUG DESIGN SHOWN

NOTE

- Class 150 Size 10" & larger have keyed stem.
- Class 300 Size 8" & larger have keyed stem.
- Class 600 Size 6" & larger have keyed stem.

MATERIALS - FIRE SAFE SEAT

CLASS 150 - 2" THRU 24" | CLASS 300 - 2" THRU 24" | CLASS 600 - 3" THRU 12"

STANDARD MATERIAL LIST

	PART	MATERIAL
1	Body	A351-CF8M or A216-WCB
2	Disc	A351-CF8M
3	Body Seal	Graphite
4	Metal Seat	Inconel 718
5	Seat	RTFM (TFM 1700)*
6	Seat Retainer	A351-CF8M or A216-WCB
7	Seat Retainer Bolt	Stainless Steel 316
8	Stem	17-4PH
9	Disc Pin	17-4PH
10	End Cap Bolt	Stainless Steel 316
11	Washer	Stainless Steel 316
12	End Cap	A351-CF8M or A216-WCB
13	Spacer	Stainless Steel 316
14	End Cap Seal	Graphite
15	Thrust Ring	Stainless Steel 316
16	Lower Bearing	Stainless Steel 316/PTFE
17	Upper Bearing	Stainless Steel 316/PTFE
18	Anti-Extrusion Ring	Stainless Steel 316
19	Stem Packing	Graphite
20	Packing Gland	Stainless Steel 316
21	Gland Nut	Stainless Steel 316
22	Washer	Stainless Steel 316
23	Gland Studs	Stainless Steel 316
24	Gland Plate	A351-CF8M or A216-WCB

** TFM 1700 modified PTFE is a next-generation PTFE with improved properties. Added glass further improves the seat providing greater wear resistance and a higher modulus.*

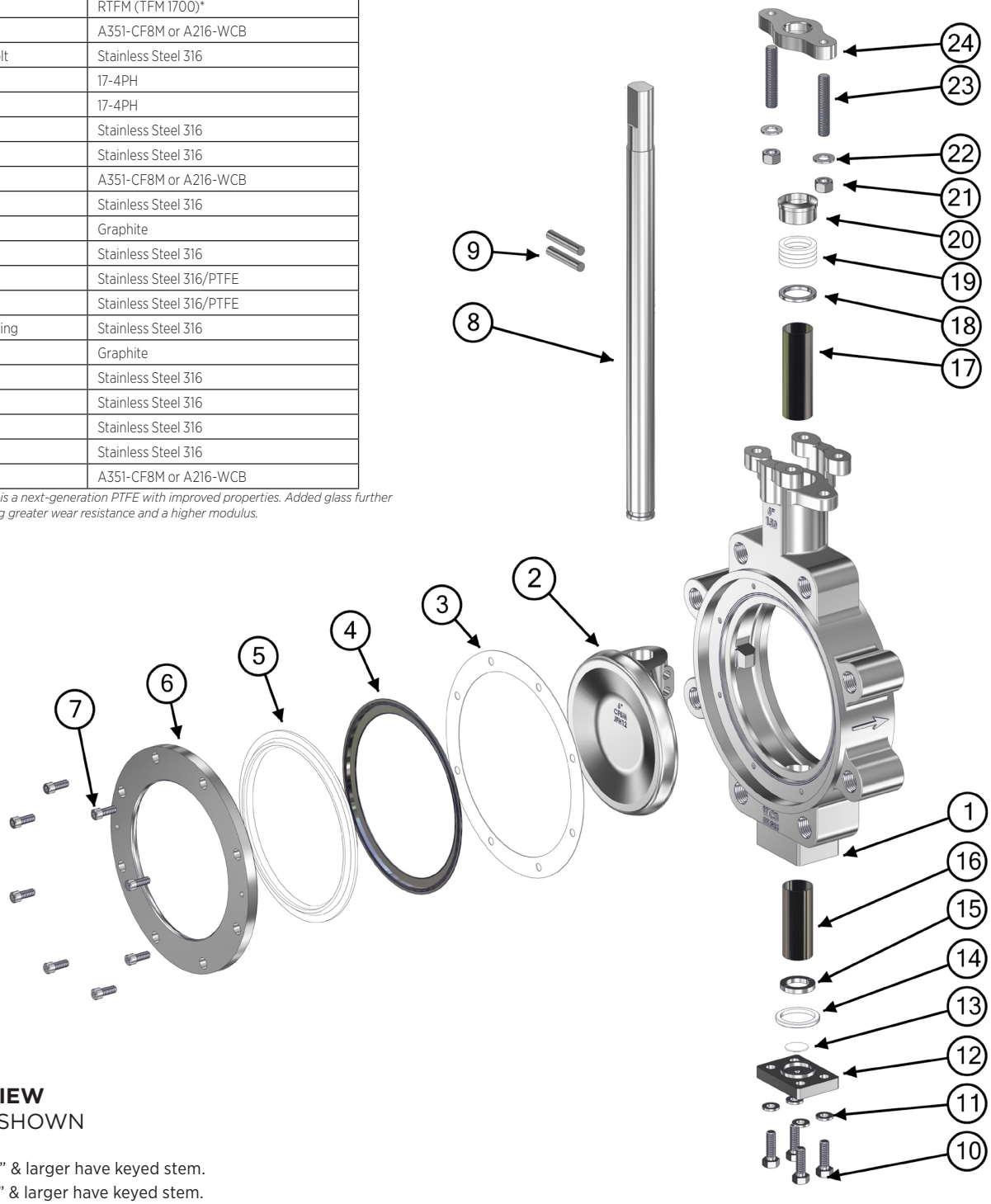

EXPLODED VIEW

LUG DESIGN SHOWN

NOTE

- Class 150 Size 10" & larger have keyed stem.
- Class 300 Size 8" & larger have keyed stem.
- Class 600 Size 6" & larger have keyed stem.

MATERIALS - METAL SEAT

CLASS 150 - 2" THRU 24" | CLASS 300 - 2" THRU 24" | CLASS 600 - 3" THRU 12"

STANDARD MATERIAL LIST

	PART	MATERIAL
1	Body	A351-CF8M or A216-WCB
2	Disc	A351-CF8M - Nitrided
3	Body Seal	Synthetic Gasket
4	Seat	Stainless Steel 316 - Nitrided
5	Seat Retainer	A351-CF8M or A216-WCB
6	Seat Retainer Bolts	Stainless Steel 316
7	Stem	17-4 PH
8	Disc Pin	17-4 PH
9	End Cap Bolt	Stainless Steel 316
10	Washer	Stainless Steel 316
11	End Cap	A351-CF8M or A216-WCB
12	Spacer	Graphite
13	End Cap Seal	Graphite
14	Thrust Ring	Stainless Steel 316
15	Lower Bearing	Stainless Steel 316 / PTFE
16	Upper Bearing	Stainless Steel 316 / PTFE
17	Anti-Extrusion Ring	Stainless Steel
18	Stem Packing	Graphite
19	Packing Gland	Stainless Steel 316
20	Gland Nut	Stainless Steel 316
21	Washer	Stainless Steel 316
22	Gland Studs	Stainless Steel 316
23	Gland Plate	A351-CF8M or A216-WCB

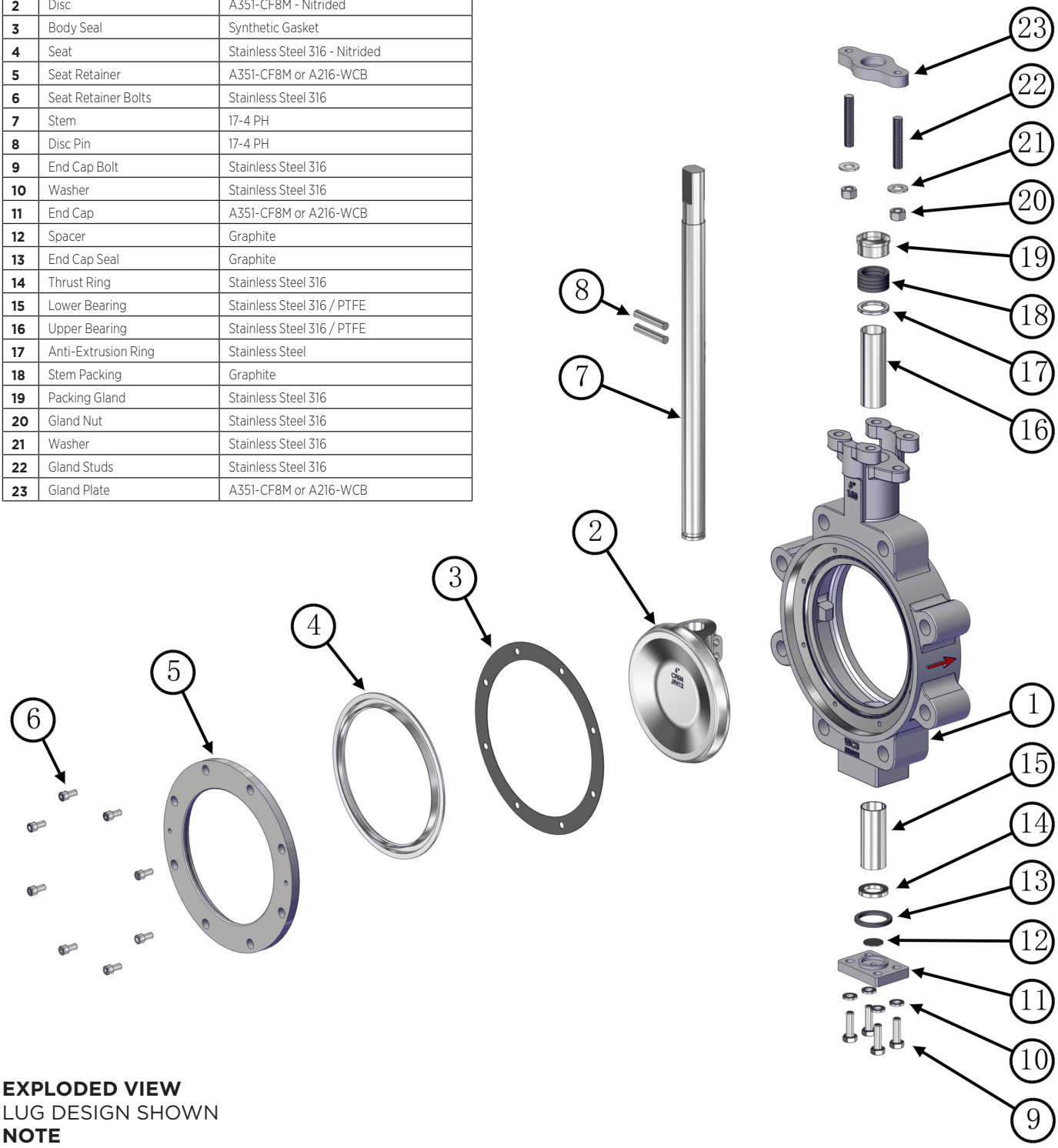

EXPLODED VIEW

LUG DESIGN SHOWN

NOTE

- Class 150 Size 10" & larger have keyed stem.
- Class 300 Size 8" & larger have keyed stem.
- Class 600 Size 6" & larger have keyed stem.

215L/215W SERIES

CLASS 150 - 2" THRU 24", 30", 36"

Four hole mounting pattern shown.
See table column "G" for number of mounting holes.

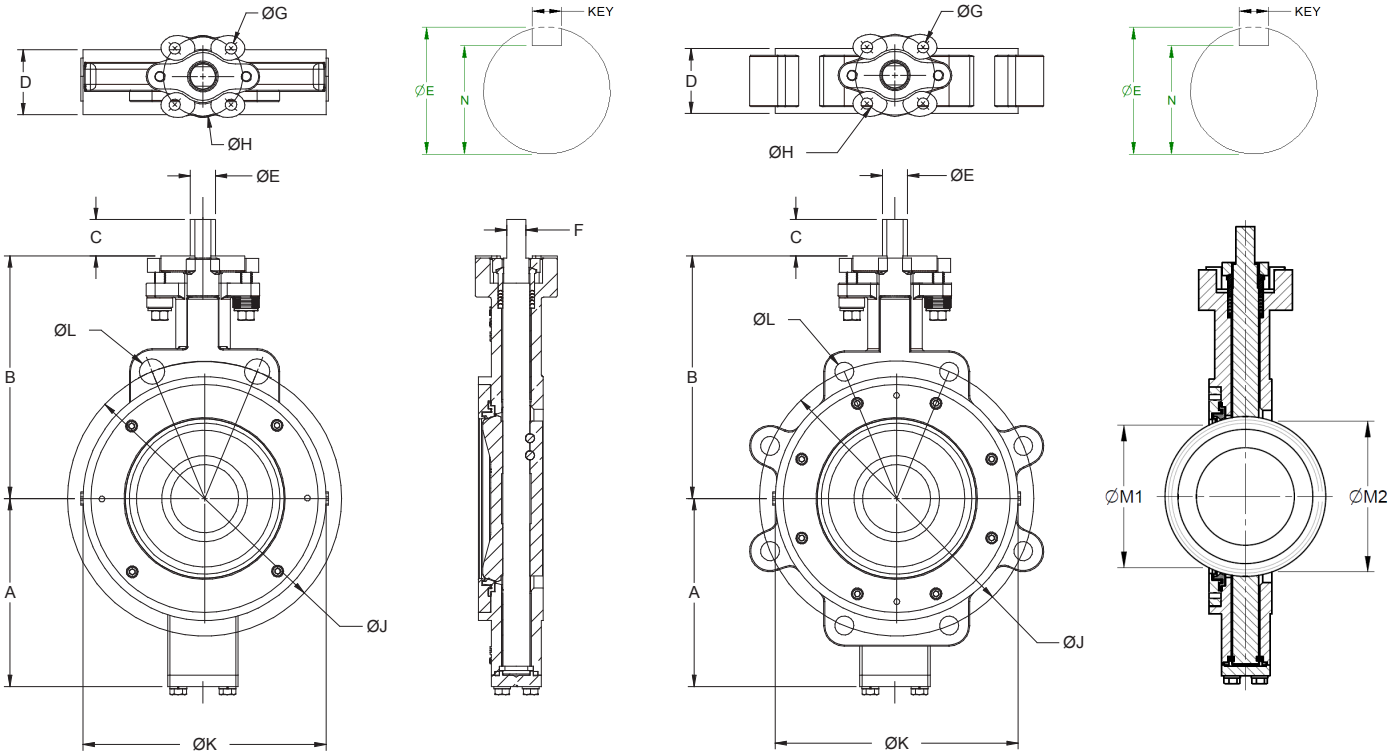

WAFER **LUG**

150 CLASS

DOUBLE-D AND KEYED STEM

SIZE (IN.)	SIZE DN	DIMENSIONS (IN.)															
		A	B	C	D	ØE	F	ØG	ØH**	ØJ	ØK	ØL WAFER	ØL LUG	ØM1	ØM2	N	KEY
2	50	3.622	5.276	1.102	1.693	0.476	0.354	4 x 0.394	2.756 (F07)	4.75	4.09	2 x 0.669	4 x 5/8"-11UNC-2B	0.50	1.64	--	--
2.5	65	4.016	5.787	1.102	1.850	0.555	0.433	4 x 0.394	2.756 (F07)	5.50	4.72	2 x 0.748	4 x 5/8"-11UNC-2B	1.48	2.06	--	--
3	80	4.331	6.142	1.102	1.890	0.555	0.433	4 x 0.394	2.756 (F07)	6.00	4.92	2 x 0.748	4 x 5/8"-11UNC-2B	1.67	2.58	--	--
4	100	4.764	7.008	1.260	2.126	0.713	0.551	4 x 0.394	2.756 (F07)	7.50	6.10	2 x 0.748	8 x 5/8"-11UNC-2B	2.76	3.46	--	--
5	125	5.591	7.598	1.260	2.244	0.874	0.669	4 x 0.394	2.756 (F07)	8.50	7.24	2 x 0.874	8 x 3/4"-10UNC-2B	3.94	4.49	--	--
6	150	6.496	8.386	1.259	2.244	0.874	0.669	4 x 0.394	2.756 (F07)	9.50	8.43	2 x 0.874	8 x 3/4"-10UNC-2B	5.02	5.46	--	--
8	200	7.165	9.449	1.260	2.520	0.992	0.748	4 x 0.551	4.921 (F12)	11.75	10.55	2 x 0.874	8 x 3/4"-10UNC-2B	6.95	7.26	--	--
10	250	8.386	10.827	2.165	2.795	1.102	--	4 x 0.551	4.921 (F12)	14.25	12.68	2 x 0.984	12 x 7/8"-9UNC-2B	8.85	9.15	0.924	0.313
12	300	10.236	12.283	2.165	3.189	1.417	--	4 x 0.551	4.921 (F12)	17.00	14.92	2 x 0.984	12 x 7/8"-9UNC-2B	10.37	10.70	1.205	0.375
14	350	11.811	13.307	2.559	3.622	1.654	--	4 x 0.709	5.512 (F14)	18.75	16.14	2 x 1.118	12 x 1"-8UNC-2B	11.89	12.25	1.406	0.437
16	400	13.307	15.354	3.150	4.016	1.969	--	4 x 0.866	6.496 (F16)	21.25	18.43	2 x 1.118	16 x 1"-8UNC-2B	13.59	13.94	1.686	0.500
18	450	14.803	16.732	3.149	4.488	1.969	--	4 x 0.866	6.496 (F16)	22.75	20.94	4 x 1.240	16 x1-1/8"-8UN-2B	15.65	15.91	1.686	0.500
20	500	15.748	17.717	3.543	5.000	2.362	--	4 x 0.866	6.496 (F16)	25.00	22.99	4 x 1-1/8"-8UN-2B	20 x 1-1/8"-8UN-2B	17.50	17.72	2.101	0.625
24	600	18.622	20.787	4.331	6.063	2.559	--	8 x 0.748	10.000 (F25)	29.50	27.24	4 x 1-1/4"-8UN-2B	20 x 1-1/4"-8UN-2B	20.94	21.01	2.253	0.750
*30	750	23.228	25.315	4.331	7.480	3.150	--	8 x 0.748	10.000 (F25)	36.00	36.42	--	28 x 1-1/4"-8UN-2B	26.22	26.28	2.775	0.875
*36	850	26.575	28.740	4.331	7.992	3.150	--	8 x 0.906	11.732 (F30)	42.75	45.28	--	32 x 1-1/2"-8UN-2B	32.29	32.35	2.775	0.875

**30" & 36" are Class 150 lug style only.*
*** ISO 5211 mounting/drilling pattern (F size) shown in parentheses.*

REV. 03DEC18

230L/230W SERIES

CLASS 300 - 2" THRU 24"

Four hole mounting pattern shown.
See table column "G" for number of mounting holes.

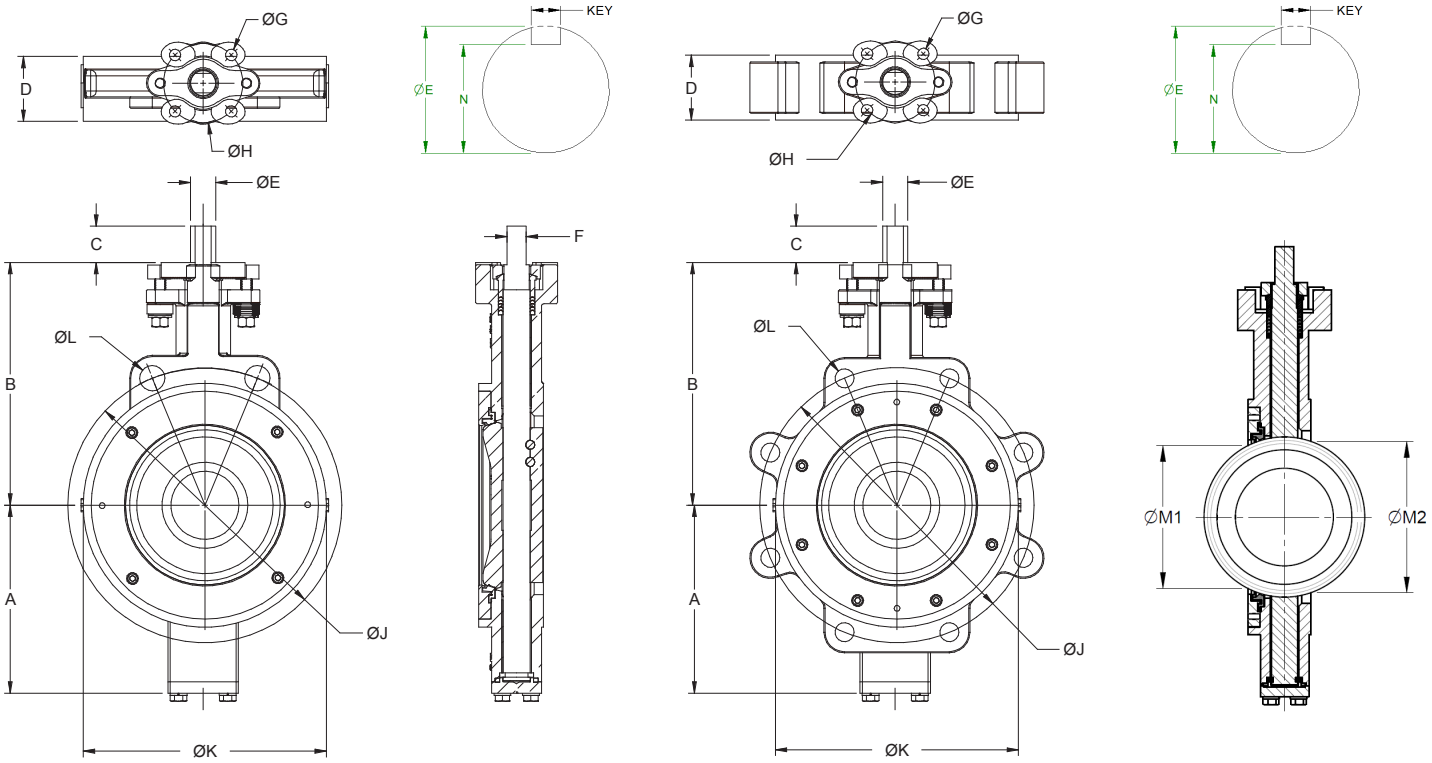

WAFER **LUG**

300 CLASS

DOUBLE-D AND KEYED STEM

SIZE (IN.)	SIZE DN	DIMENSIONS (IN.)															
		A	B	C	D	ØE	F	ØG	ØH**	ØJ	ØK	ØL WAFER	ØL LUG	ØM1	ØM2	N	KEY
2	50	3.622	5.276	1.102	1.693	0.476	0.354	4 x 0.394	2.756 (F07)	5.00	4.17	2 x 0.709	8 x 5/8"-11 UNC-2B	0.50	1.64	--	--
2.5	65	4.016	5.787	1.102	1.850	0.555	0.433	4 x 0.394	2.756 (F07)	5.88	4.72	2 x 0.874	8 x 3/4"-10 UNC-2B	1.48	2.06	--	--
3	80	4.331	6.142	1.102	1.890	0.555	0.433	4 x 0.394	2.756 (F07)	6.62	4.92	2 x 0.874	8 x 3/4"-10 UNC-2B	1.67	2.58	--	--
4	100	4.764	7.008	1.260	2.126	0.713	0.551	4 x 0.394	2.756 (F07)	7.88	6.10	2 x 0.874	8 x 3/4"-10 UNC-2B	2.76	3.46	--	--
5	125	5.591	7.598	1.260	2.244	0.874	0.669	4 x 0.472	4.016 (F10)	9.25	7.24	2 x 0.874	8 x 3/4"-10 UNC-2B	3.94	4.49	--	--
6	150	6.496	8.386	1.259	2.323	0.874	0.669	4 x 0.472	4.016 (F10)	10.62	8.43	2 x 0.874	12 x 3/4"-10 UNC-2B	4.93	5.46	--	--
8	200	8.268	10.157	2.165	2.874	1.102	--	4 x 0.551	4.921 (F12)	13.00	10.55	2 x 0.984	12 x 7/8"-9 UNC-2B	6.73	7.19	0.924	0.313
10	250	9.449	11.417	2.165	3.268	1.417	--	4 x 0.551	4.921 (F12)	15.25	12.72	4 x 1"-8UNC-2B	16 x 1"-8 UNC-2B	8.44	8.85	1.205	0.375
12	300	10.63	12.795	2.559	3.662	1.654	--	4 x 0.709	5.512 (F14)	17.75	15.04	4 x 1-1/8"-8UN-2B	16 x 1-1/8"-8 UN-2B	10.17	10.62	1.406	0.437
14	350	12.756	14.764	3.150	4.606	1.969	--	4 x 0.866	6.496 (F16)	20.25	16.14	4 x 1-1/8"-8UN-2B	20 x 1-1/8"-8 UN-2B	11.55	11.89	1.686	0.500
16	400	14.37	16.732	3.149	5.236	1.969	--	4 x 0.866	6.496 (F16)	22.50	18.43	4 x 1-1/4"-8UN-2B	20 x 1-1/4"-8 UN-2B	13.21	13.55	1.686	0.500
18	450	16.043	18.209	4.331	5.866	2.362	--	8 x 0.748	10.000 (F25)	24.75	20.94	4 x 1-1/4"-8UN-2B	24 x 1-1/4"-8 UN-2B	15.36	15.54	2.101	0.625
20	500	17.795	19.882	4.331	6.260	2.835	--	8 x 0.748	10.000 (F25)	27.00	22.99	4 x 1-1/4"-8UN-2B	24 x 1-1/4"-8 UN-2B	16.93	17.27	2.534	0.750
24	600	20.315	22.835	4.331	7.126	3.150	--	8 x 0.748	10.000 (F25)	32.00	27.24	4 x 1-1/2"-8UN-2B	24 x 1-1/2"-8 UN-2B	20.57	20.57	2.775	0.875

*** ISO 5211 mounting/drilling pattern (F size) shown in parentheses.*

REV. 03DEC18

aalberts integrated piping systems

260L/260W SERIES

CLASS 600 - 3" THRU 12"

Four hole mounting pattern shown.
See table column "G" for number of mounting holes.

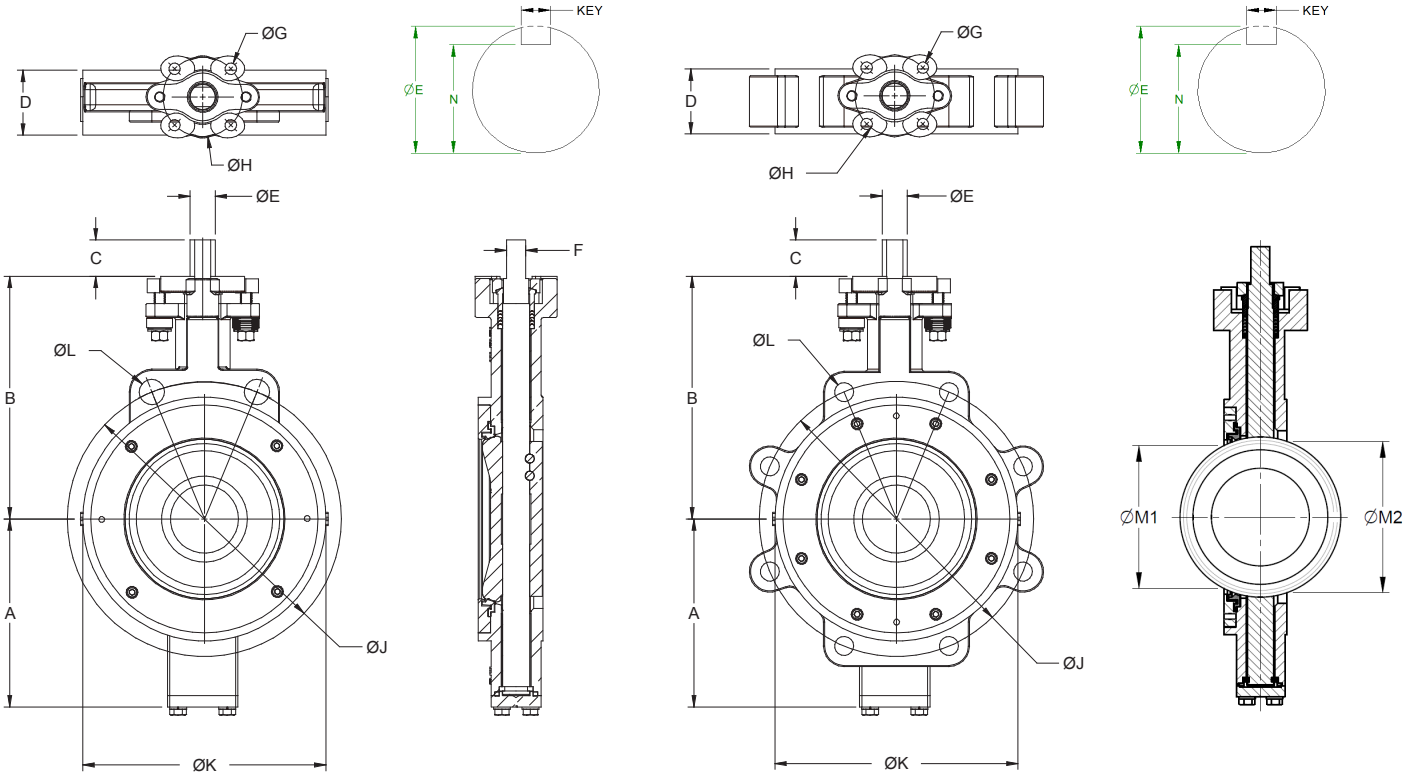

WAFER **LUG**

600 CLASS

DOUBLE-D AND KEYED STEM

SIZE (IN.)	SIZE DN	DIMENSIONS (IN.)															
		A	B	C	D	ØE	F	ØG	ØH**	ØJ	ØK	ØL WAFER	ØL LUG	ØM1	ØM2	N	KEY
3	80	4.705	6.496	1.260	2.126	0.713	0.551	4 x 0.394	2.756 (F07)	6.62	5.71	2 x 0.866	8 x 3/4"-10 UNC-2B	1.87	2.68	--	--
4	100	5.748	7.717	1.260	2.520	0.874	0.669	4 x 0.551	4.921 (F12)	8.50	6.85	2 x 0.984	8 x 7/8"-9 UNC-2B	2.79	3.37	--	--
6	150	7.953	9.724	2.165	3.071	1.417	--	4 x 0.551	4.921 (F12)	11.50	9.45	4 x 1"-8UNC-2B	12 x 1"-8 UNC-2B	4.52	5.26	1.205	0.375
8	200	9.528	11.614	3.150	4.016	1.890	--	4 x 0.906	6.496 (F16)	13.75	11.65	4 x 1-1/8"-8UN-2B	12 x 1-1/8"-8 UN-2B	6.14	6.82	1.606	0.500
10	250	11.024	13.386	3.150	4.606	1.969	--	4 x 0.906	6.496 (F16)	17.00	13.86	4 x 1-1/4"-8UN-2B	16 x 1-1/4"-8 UN-2B	7.99	8.61	1.686	0.500
12	300	12.913	15.354	4.331	5.512	2.362	--	8 x 0.709	10.000 (F25)	19.25	16.34	4 x 1-1/4"-8UN-2B	20 x 1-1/4"-8 UN-2B	9.56	10.13	2.101	0.625

(5" size not available)
*** ISO 5211 mounting/drilling pattern (F size) shown in parentheses.*

REV. 03DEC18

HANDLE & GEAR DIMENSIONS

RTFM & UHMWPE SEATS

CLASS 150

RTFM & UHMWPE SEAT

VALVE SIZE		GEAR RATIO	DIMENSIONS IN INCHES						
INCHES	DN		A	B	C	D	E	F	G
2"	50	37:1	2.24	2.11	7.87	5.9	2.09	1.14	8.82
2.5"	65	37:1	2.24	2.11	7.87	5.9	2.09	1.14	8.82
3"	80	37:1	2.24	2.11	7.87	5.9	2.09	1.14	8.82
4"	100	37:1	2.24	2.11	7.87	5.9	2.09	1.14	12.82
5"	125	37:1	2.24	2.11	7.87	5.9	2.09	1.14	12.82
6"	150	37:1	2.24	2.11	7.87	5.9	2.09	1.14	12.82
8"	200	37:1	2.76	2.11	10.94	11.81	2.09	1.50	22.00
10"	250	37:1	2.76	2.11	10.94	11.81	2.09	1.50	22.00
12"	300	34:1	3.43	2.50	12.87	11.81	2.80	1.59	22.00
14"	350	55:1	4.06	4.39	13.07	15.75	4.11	1.93	–
16"	400	55:1	4.06	4.39	13.07	15.75	4.11	1.93	–
18"	450	55:1	4.06	4.39	13.07	15.75	4.11	1.93	–
20"	500	55:1	4.06	4.39	13.07	15.75	4.11	1.93	–
24"	600	52:1	4.96	4.92	13.11	15.75	5.12	2.40	–
30"	750	280:1	6.65	7.48	18.90	24.00	7.00	3.54	–
36"	850	360:1	8.15	9.06	20.90	24.00	8.26	4.29	

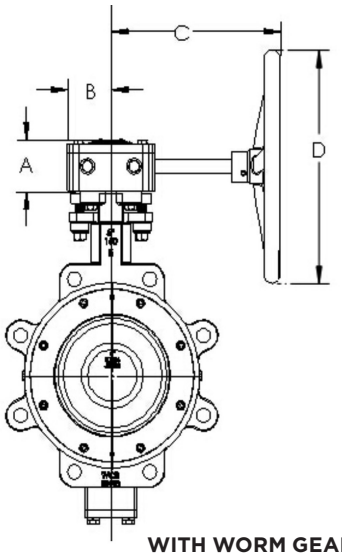

WITH WORM GEAR

CLASS 300

RTFM & UHMWPE SEAT

VALVE SIZE		GEAR RATIO	DIMENSIONS (IN.)						
INCHES	DN		A	B	C	D	E	F	G
2"	50	37:1	2.24	2.11	7.87	5.9	2.09	1.14	8.82
2.5"	65	37:1	2.24	2.11	7.87	5.9	2.09	1.14	8.82
3"	80	37:1	2.24	2.11	7.87	5.9	2.09	1.14	8.82
4"	100	37:1	2.24	2.11	7.87	5.9	2.09	1.14	12.82
5"	125	37:1	2.76	2.11	10.94	11.81	2.09	1.50	12.82
6"	150	37:1	2.76	2.11	10.94	11.81	2.09	1.50	12.82
8"	200	34:1	3.43	2.50	12.87	11.81	2.80	1.59	22.00
10"	250	34:1	3.43	2.50	12.87	11.81	2.80	1.59	22.00
12"	300	55:1	4.06	4.39	13.07	15.75	4.11	1.93	–
14"	350	55:1	4.06	4.39	13.07	15.75	4.11	1.93	–
16"	400	55:1	4.06	4.39	13.07	15.75	4.11	1.93	–
18"	450	52:1	4.96	4.92	13.11	15.75	5.12	2.40	–
20"	500	280:1	6.65	7.48	18.90	24.00	7.00	3.54	–
24"	600	280:1	6.65	7.48	18.90	24.00	7.00	3.54	–

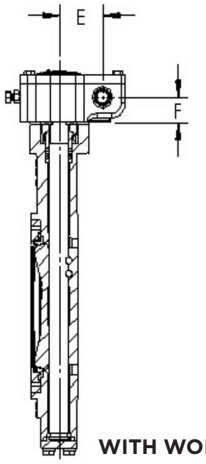

WITH WORM GEAR

CLASS 600

RTFM SEAT

VALVE SIZE		GEAR RATIO	DIMENSIONS (IN.)					
INCHES	DN		A	B	C	D	E	F
3"	80	37:1	2.24	2.11	7.87	5.9	2.09	1.14
4"	100	37:1	2.76	2.11	10.94	11.81	2.09	1.50
6"	150	34:1	2.76	2.11	10.94	11.81	2.09	1.50
8"	200	55:1	4.06	4.39	13.07	15.75	4.11	1.93
10"	250	55:1	4.06	4.39	13.07	15.75	4.11	1.93
12"	300	52:1	4.96	4.92	13.11	15.75	5.12	2.40

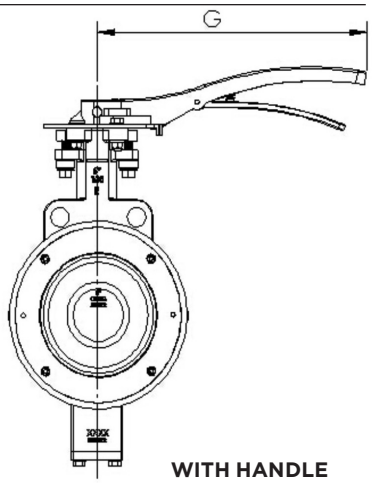

WITH HANDLE

HANDLE & GEAR DIMENSIONS

FIRE SAFE & METAL SEAT

CLASS 150

FIRE SAFE & METAL SEAT

VALVE SIZE		GEAR RATIO	DIMENSIONS (IN.)						
INCHES	DN		A	B	C	D	E	F	G
2″	50	37:1	2.24	2.11	7.87	5.9	2.09	1.14	8.82
2.5″	65	37:1	2.24	2.11	7.87	5.9	2.09	1.14	8.82
3″	80	37:1	2.24	2.11	7.87	5.9	2.09	1.14	8.82
4″	100	37:1	2.24	2.11	7.87	5.9	2.09	1.14	12.82
5″	125	37:1	2.24	2.11	7.87	5.9	2.09	1.14	12.82
6″	150	37:1	2.24	2.11	7.87	5.9	2.09	1.14	12.82
8″	200	37:1	2.76	2.11	10.94	11.81	2.09	1.50	22.00
10″	250	34:1	3.43	2.50	12.87	11.81	2.80	1.59	22.00
12″	300	55:1	4.06	4.39	13.07	15.75	4.11	1.93	22.00
14″	350	55:1	4.06	4.39	13.07	15.75	4.11	1.93	–
16″	400	55:1	4.06	4.39	13.07	15.75	4.11	1.93	–
18″	450	52:1	4.96	4.92	13.11	15.75	5.12	2.40	–
20″	500	52:1	4.96	4.92	13.11	15.75	5.12	2.40	–
24″	600	280:1	6.65	7.48	18.90	24.00	7.00	3.54	–

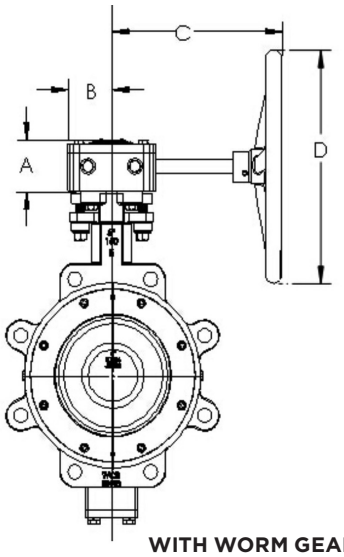

WITH WORM GEAR

CLASS 300

FIRE SAFE & METAL SEAT

VALVE SIZE		GEAR RATIO	DIMENSIONS (IN.)						
INCHES	DN		A	B	C	D	E	F	G
2″	50	37:1	2.24	2.11	7.87	5.9	2.09	1.14	8.82
2.5″	65	37:1	2.24	2.11	7.87	5.9	2.09	1.14	8.82
3″	80	37:1	2.24	2.11	7.87	5.9	2.09	1.14	8.82
4″	100	37:1	2.24	2.11	7.87	5.9	2.09	1.14	12.82
5″	125	37:1	2.76	2.11	10.94	11.81	2.09	1.50	12.82
6″	150	37:1	2.76	2.11	10.94	11.81	2.09	1.50	12.82
8″	200	34:1	3.43	2.50	12.87	11.81	2.80	1.59	22.00
10″	250	55:1	4.06	4.39	13.07	15.75	4.11	1.93	22.00
12″	300	55:1	4.06	4.39	13.07	15.75	4.11	1.93	–
14″	350	52:1	4.96	4.92	13.11	15.75	5.12	2.40	–
16″	400	52:1	4.96	4.92	13.11	15.75	5.12	2.40	–
18″	450	280:1	6.65	7.48	18.90	24.00	7.00	3.54	–
20″	500	280:1	6.65	7.48	18.90	24.00	7.00	3.54	–
24″	600	360:1	8.15	9.06	20.90	24.00	8.26	4.29	

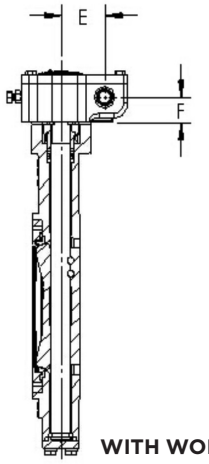

WITH WORM GEAR

CLASS 600

FIRE SAFE & METAL SEAT

VALVE SIZE		GEAR RATIO	DIMENSIONS (IN.)					
INCHES	DN		A	B	C	D	E	F
3″	80	37:1	2.24	2.11	7.87	5.9	2.09	1.14
4″	100	34:1	3.43	2.50	12.87	11.81	2.80	1.59
6″	150	55:1	4.06	4.39	13.07	15.75	4.11	1.93
8″	200	55:1	4.06	4.39	13.07	15.75	4.11	1.93
10″	250	52:1	4.96	4.92	13.11	15.75	5.12	2.40
12″	300	280:1	8.86	5.91	15.04	24.00	9.02	3.23

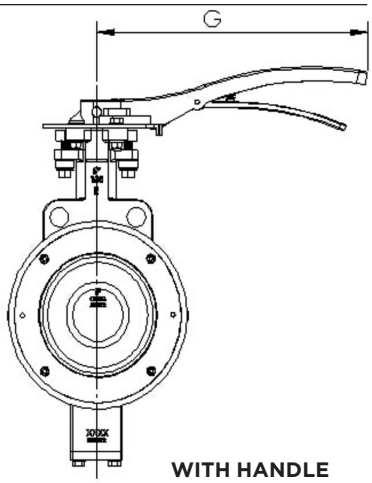

WITH HANDLE

FLOW DATA

DOUBLE OFFSET HIGH PERFORMANCE BUTTERFLY VALVES

Cv values (US gallons per minute) represent the flow of 60°F water through a 100% open valve at a pressure drop of 1 psi.

The metric equivalent, Kv, is the flow of water at 16°C through the valve in cubic meters per hour at a pressure drop of 1 kg/cm2.
To convert Cv to Kv, multiply the Cv by 0.8569.

RATED FLOW COEFFICIENT (CV)

215L/215W

SIZE		CLASS	ANGLE OF DISC OPENING (DEGREES)								
INCHES	DN		10°	20°	30°	40°	50°	60°	70°	80°	90°
2"	50	150	1	12	26	40	47	49	50	51	62
2.5"	65	150	4	19	47	63	78	78	84	95	110
3"	80	150	3	25	52	74	87	100	123	145	157
4"	100	150	6	44	82	119	156	196	240	266	284
5"	125	150	14	71	131	168	209	280	368	479	512
6"	150	150	20	108	198	272	380	501	651	803	831
8"	200	150	54	251	390	559	780	1043	1385	1747	1838
10"	250	150	84	382	580	827	1174	1612	2202	2803	2811
12"	300	150	119	553	874	1230	1733	2371	3274	4178	4205
14"	350	150	163	632	955	1383	1813	2855	3944	5219	5564
16"	400	150	250	879	1334	1916	2781	3939	5530	6984	7091
18"	450	150	388	1136	1681	2433	3526	4981	6843	8631	9127
20"	500	150	463	1390	2052	2985	4363	6280	8900	11803	12613
24"	600	150	710	2159	3312	4750	6881	9926	14336	19656	20596
30"	750	150	1107	2602	3603	5556	8721	13216	20376	28285	31500
36"	900	150	1692	3391	4917	7914	12744	20021	31640	45241	51233

RATED FLOW COEFFICIENT (CV)

230L/230W

SIZE		CLASS	ANGLE OF DISC OPENING (DEGREES)								
INCHES	DN		10°	20°	30°	40°	50°	60°	70°	80°	90°
2"	50	300	1	12	26	40	47	49	50	51	62
2.5"	65	300	4	19	47	63	78	78	84	95	110
3"	80	300	3	25	52	74	87	100	123	145	157
4"	100	300	6	44	82	119	156	196	240	266	284
5"	125	300	14	71	131	168	209	280	368	479	512
6"	150	300	20	108	198	272	380	501	651	803	831
8"	200	300	47	206	319	420	595	843	1106	1463	1502
10"	250	300	81	344	524	720	1014	1399	1821	2205	2413
12"	300	300	117	506	728	1019	1449	2044	2717	3456	3575
14"	350	300	161	603	898	1208	1754	2493	3294	4129	4603
16"	400	300	164	766	1172	1560	2275	3287	4301	5550	6646
18"	450	300	274	809	1320	1791	2803	4051	5603	7193	8946
20"	500	300	394	1100	1624	2274	3392	5075	6818	8906	11003
24"	600	300	318	1728	2462	3518	5222	7613	10323	13596	16430

RATED FLOW COEFFICIENT (CV)

260L/260W

SIZE		CLASS	ANGLE OF DISC OPENING (DEGREES)								
INCHES	DN		10°	20°	30°	40°	50°	60°	70°	80°	90°
3"	80	600	2	25	61	82	84	89	94	107	126
4"	100	600	6	42	96	138	140	149	163	197	230
6"	150	600	17	110	225	281	291	336	402	497	578
8"	200	600	43	231	424	524	528	621	731	913	1076
10"	250	600	61	335	597	772	876	1049	1281	1623	1891
12"	300	600	82	484	875	1108	1223	1498	1821	2341	2740

- *This chart should be used as a general guide.*
- *Cv = the volume of water in U.S. gallons per minute that will pass through a given valve opening with a pressure drop of 1 psig at room temperature.*

TORQUE CONSTANTS

DOUBLE OFFSET HIGH PERFORMANCE BUTTERFLY VALVES

RTFM & UHMWPE SEAT

TORQUE RATING (IN-LB)

SIZE	PSIG	CLASS 150				CLASS 300					CLASS 600					
		ΔP=100	ΔP=150	ΔP=200	ΔP=285	ΔP=100	ΔP=150	ΔP=200	ΔP=285	ΔP=740	ΔP=150	ΔP=500	ΔP=800	ΔP=1000	ΔP=1200	ΔP=1480
2"	in-lb	204	230	266	332	248	332	381	425	531	–	–	–	–	–	–
2.5"	in-lb	239	283	319	398	301	398	443	478	575	–	–	–	–	–	–
3"	in-lb	257	301	345	434	327	434	487	540	664	407	513	841	974	1,106	1,283
4"	in-lb	398	469	531	664	469	664	761	867	1,106	620	841	1,540	1,823	2,106	2,487
5"	in-lb	558	655	743	929	620	885	1,062	1,239	1,664	–	–	–	–	–	–
6"	in-lb	726	850	974	1,212	858	1,221	1,505	1,779	2,460	974	1,363	2,593	3,089	3,575	4,248
8"	in-lb	1,328	1,549	1,770	2,213	1,646	2,354	2,921	3,487	4,868	1,912	2,673	5,080	6,045	7,009	8,319
10"	in-lb	2,213	2,575	2,947	3,682	2,575	3,682	4,691	5,699	8,142	3,177	4,437	8,434	10,036	11,638	13,806
12"	in-lb	2,867	3,345	3,823	4,779	3,629	5,177	6,522	7,877	11,151	4,788	6,682	12,709	15,116	17,523	20,798
14"	in-lb	4,938	5,761	6,584	8,231	6,053	8,646	11,186	13,735	19,913	–	–	–	–	–	–
16"	in-lb	6,903	8,054	9,204	11,505	8,461	12,080	14,788	17,496	24,072	–	–	–	–	–	–
18"	in-lb	9,717	11,337	12,956	16,196	11,903	17,010	20,461	23,913	32,303	–	–	–	–	–	–
20"	in-lb	12,930	15,089	17,240	21,550	15,842	22,629	26,816	30,993	41,153	–	–	–	–	–	–
24"	in-lb	19,859	23,169	26,479	33,099	24,329	34,754	40,595	46,436	60,623	–	–	–	–	–	–
30"	in-lb	30,090	35,400	40,710	49,472	–	–	–	–	–	–	–	–	–	–	–
36"	in-lb	48,233	58,145	68,057	84,849	–	–	–	–	–	–	–	–	–	–	–

FIRE SAFE SEAT

TORQUE RATING (IN-LB)

SIZE	PSIG	CLASS 150				CLASS 300					CLASS 600					
		ΔP=100	ΔP=150	ΔP=200	ΔP=285	ΔP=100	ΔP=150	ΔP=200	ΔP=285	ΔP=740	ΔP=150	ΔP=500	ΔP=800	ΔP=1000	ΔP=1200	ΔP=1480
2"	in-lb	434	504	584	726	504	726	770	814	929	–	–	–	–	–	–
2.5"	in-lb	460	540	620	770	540	770	823	885	1,018	–	–	–	–	–	–
3"	in-lb	584	681	779	974	681	974	1,035	1,097	1,257	866	1,208	1,549	1,788	2,027	2,354
4"	in-lb	708	832	947	1,186	832	1,186	1,248	1,319	1,478	1,402	1,887	2,372	2,797	3,230	3,814
5"	in-lb	965	1,124	1,283	1,602	1,133	1,620	1,894	2,177	2,850	–	–	–	–	–	–
6"	in-lb	1,345	1,566	1,788	2,239	1,584	2,257	2,531	2,805	3,478	3,758	4,485	5,213	6,204	7,186	8,531
8"	in-lb	2,089	2,443	2,788	3,487	2,513	3,584	4,160	4,735	6,133	7,077	8,455	9,832	11,691	13,558	16,089
10"	in-lb	3,283	3,832	4,381	5,478	4,027	5,753	6,673	7,602	9,841	11,400	13,616	15,833	18,833	21,833	25,913
12"	in-lb	5,168	6,036	6,894	8,620	6,230	8,894	10,470	12,045	15,877	17,542	20,949	24,355	28,975	33,595	39,869
14"	in-lb	6,912	8,062	9,213	11,514	8,363	11,948	14,426	16,904	22,913	–	–	–	–	–	–
16"	in-lb	8,770	10,231	11,700	14,620	10,655	15,222	18,682	22,152	30,559	–	–	–	–	–	–
18"	in-lb	12,567	14,664	16,762	20,948	15,178	21,683	27,541	33,409	47,640	–	–	–	–	–	–
20"	in-lb	16,859	19,674	22,479	28,099	20,196	28,851	37,993	47,126	69,322	–	–	–	–	–	–
24"	in-lb	25,072	29,249	33,426	41,781	30,046	42,923	56,622	70,331	103,607	–	–	–	–	–	–

METAL SEAT

TORQUE RATING (IN-LB)

SIZE	PSIG	CLASS 150				CLASS 300					CLASS 600					
		ΔP=100	ΔP=150	ΔP=200	ΔP=285	ΔP=100	ΔP=150	ΔP=200	ΔP=285	ΔP=740	ΔP=150	ΔP=500	ΔP=800	ΔP=1000	ΔP=1200	ΔP=1480
2"	in-lb	478	558	637	797	558	797	850	903	1,027	–	–	–	–	–	–
2.5"	in-lb	513	593	681	850	593	850	912	974	1,124	–	–	–	–	–	–
3"	in-lb	637	743	850	1,062	743	1,062	1,133	1,204	1,381	832	1,035	1,699	1,965	2,230	2,593
4"	in-lb	797	929	1,062	1,328	929	1,328	1,398	1,460	1,628	1,496	2,018	3,708	4,381	5,053	5,965
5"	in-lb	1,062	1,239	1,416	1,770	1,248	1,788	2,089	2,398	3,133	–	–	–	–	–	–
6"	in-lb	1,487	1,735	1,982	2,478	1,770	2,522	2,814	3,106	3,823	2,947	4,106	7,815	9,301	10,788	12,797
8"	in-lb	2,257	2,637	3,009	3,761	2,726	3,894	4,540	5,177	6,744	4,443	6,204	11,797	14,036	16,275	19,311
10"	in-lb	3,797	4,434	5,052	6,328	4646	6,638	7,584	8,531	10,824	6,558	9,151	17,417	20,718	24,019	28,506
12"	in-lb	5,947	6,938	7,930	9,912	7,558	10,797	12,302	13,815	17,470	11,001	15,364	29,223	34,772	40,321	47,843
14"	in-lb	8,655	10,098	11,540	14,426	10,841	15,488	18,196	20,904	27,488	–	–	–	–	–	–
16"	in-lb	10,965	12,797	14,620	18,275	14,249	20,355	23,691	27,037	35,143	–	–	–	–	–	–
18"	in-lb	15,718	18,337	20,957	26,196	19,514	27,878	33,949	40,029	54,782	–	–	–	–	–	–
20"	in-lb	21,081	24,594	28108	35,135	25709	36,728	45,648	54,578	76,252	–	–	–	–	–	–
24"	in-lb	31,382	36,612	41,843	52,304	38,595	55,136	67,251	79,367	108,793	–	–	–	–	–	–

- *Under certain conditions, hydrodynamic torque can meet or exceed seating and unseating torques. When designing valve systems, hydrodynamic torque must be considered to help ensure correct selection of actuation.*
- *All published double offset High Performance Butterfly Valve torque charts have a 10% safety factor included.*

WEIGHTS

DOUBLE OFFSET HIGH PERFORMANCE BUTTERFLY VALVES

RTFM & UHMWPE SEAT

VALVE SIZE		CLASS 150		CLASS 300		CLASS 600	
INCHES	DN	WAFER LB (KG)	LUG LB (KG)	WAFER LB (KG)	LUG LB (KG)	WAFER LB (KG)	LUG LB (KG)
2"	50	9.2 (4.2)	10.9 (5.0)	9.2 (4.2)	12.2 (5.5)	–	–
2.5"	65	11.7 (5.3)	13.0 (5.9)	11.7 (5.3)	15.4 (7.0)	–	–
3"	80	12.4 (5.6)	14.2 (6.4)	12.4 (5.6)	17.7 (8.0)	18.2 (8.2)	22.5 (10.2)
4"	100	17.9 (8.1)	23.5 (10.7)	18.0 (8.2)	25.7 (11.6)	31.5 (14.3)	41.1 (18.6)
5"	125	24.0 (10.9)	31.0 (14.1)	25.3 (11.5)	34.9 (15.8)	–	–
6"	150	30.6 (13.9)	38.0 (17.2)	32.4 (14.7)	47.0 (21.2)	71.4 (32.4)	90.6 (41.1)
8"	200	46.7 (21.2)	56.3 (25.5)	60.0 (27.2)	82.8 (37.5)	136.6 (62.0)	167.1 (75.8)
10"	250	68.5 (31.1)	86.4 (39.2)	96.8 (43.9)	129.5 (58.7)	200.2 (90.8)	279.8(126.9)
12"	300	104.2 (47.3)	133.0 (60.3)	143.4 (65.0)	189.0 (85.7)	325.0 (147.4)	452.3 (205.2)
14"	350	138.7 (62.9)	183.3 (83.1)	218.0 (98.9)	325.0 (147.4)	–	–
16"	400	206.9 (93.8)	273.6 (124.1)	309.1 (140.2)	443.9 (201.4)	–	–
18"	450	278.9 (126.5)	340.6 (154.5)	438.7 (199.0)	634.7 (288.0)	–	–
20"	500	357.2 (162.0)	440.8 (199.9)	575.0 (260.8)	782.7 (355.0)	–	–
24"	600	574.3 (260.5)	709.4 (321.8)	840.2 (381.1)	1,201.9 (545.2)	–	–
30"	750	–	1,392.6 (633.0)	–	–	–	–
36"	850	–	2,142.8 (974.0)	–	–	–	–

FIRE SAFE & METAL SEAT

VALVE SIZE		CLASS 150		CLASS 300		CLASS 600	
INCHES	DN	WAFER LB (KG)	LUG LB (KG)	WAFER LB (KG)	LUG LB (KG)	WAFER LB (KG)	LUG LB (KG)
2"	50	9.3 (4.2)	11.0 (5.0)	9.3 (4.2)	12.2 (5.5)	–	–
2.5"	65	11.8 (5.3)	13.0 (5.9)	11.8 (5.3)	15.5 (7.0)	–	–
3"	80	12.4 (5.6)	14.3 (6.5)	12.4 (5.6)	17.8 (8.1)	18.3 (8.3)	22.6 (10.2)
4"	100	18.0 (8.2)	23.6 (10.7)	18.1 (8.2)	25.8 (11.7)	31.7 (14.4)	41.3 (18.7)
5"	125	24.1 (10.9)	31.2 (14.1)	25.4 (11.5)	35.0 (15.9)	–	–
6"	150	30.8 (14.0)	38.2(17.3)	32.6 (14.8)	46.9 (21.3)	71.7 (32.5)	91.1 (41.3)
8"	200	47.0 (21.3)	56.6 (25.7)	60.3 (27.3)	83.1 (37.7)	137.3 (62.3)	168.0 (76.2)
10"	250	68.8 (31.2)	86.8 (39.4)	97.2 (44.1)	130.0 (59.0)	201.2 (91.3)	281.2 (127.5)
12"	300	104.8 (47.5)	133.6 (60.6)	143.9 (65.3)	189.8 (86.1)	326.7 (148.2)	454.6 (206.2)
14"	350	139.4 (63.3)	184.2 (83.5)	218.9 (99.3)	326.3 (148.0)		–
16"	400	207.9 (94.3)	275.0 (124.7)	310.3 (140.7)	445.7 (202.2)	–	–
18"	450	280.2 (127.1)	342.3 (155.3)	440.5 (199.8)	637.2 (289.0)	–	–
20"	500	359.0 (162.8)	443.0 (200.9)	577.3 (261.8)	785.9 (356.5)	–	–
24"	600	577.2 (261.8)	712.9 (323.4)	843.5 (382.62)	1,206.7 (547.4)	–	–

PRESSURE/TEMPERATURE RATINGS

DOUBLE OFFSET HIGH PERFORMANCE BUTTERFLY VALVES

CLASS 150

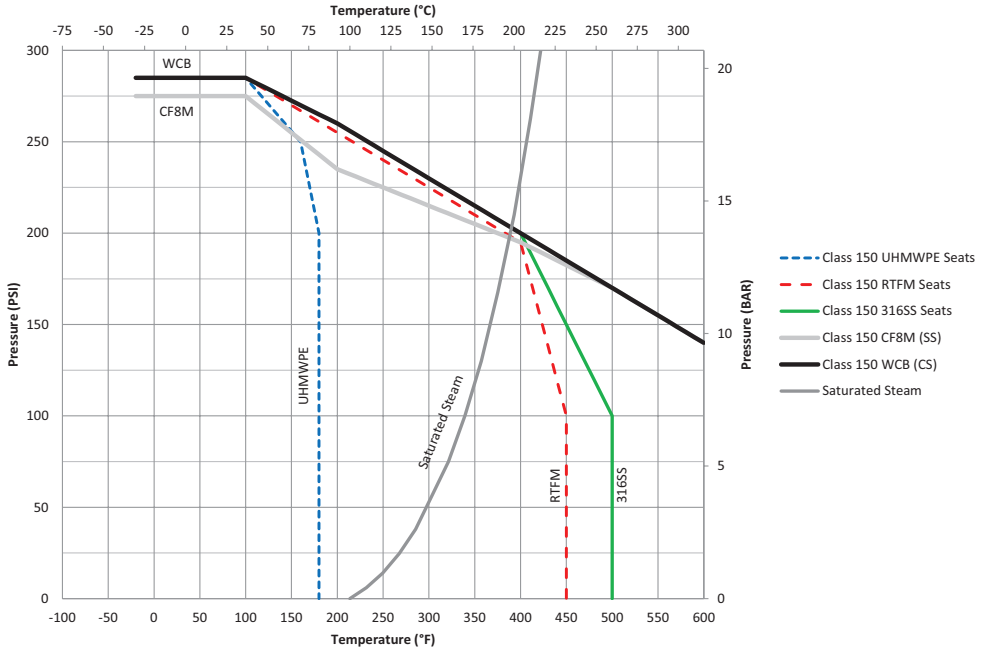

CLASS 300

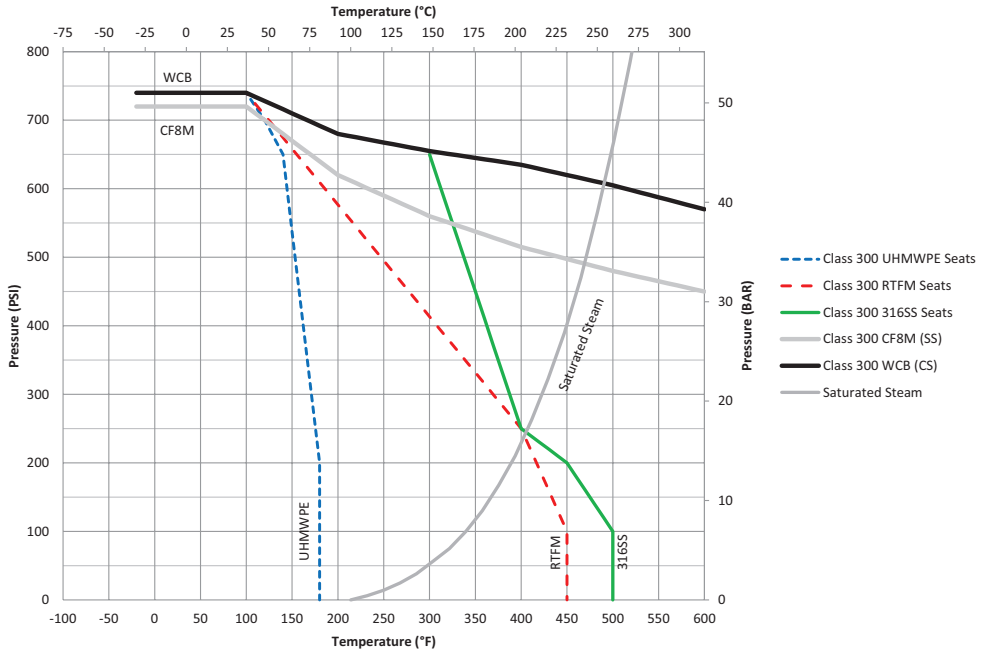

REV. 20JUL16

PRESSURE/TEMPERATURE RATINGS

DOUBLE OFFSET HIGH PERFORMANCE BUTTERFLY VALVES

CLASS 600

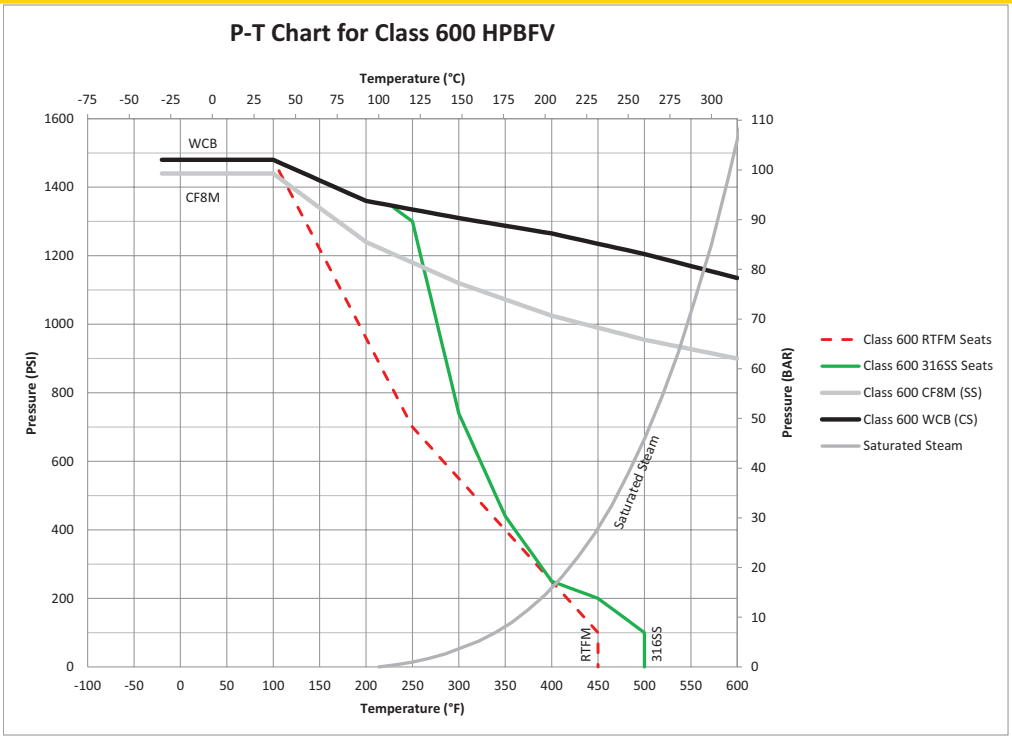

REV. 20JUL16

HOW TO SPECIFY

DOUBLE OFFSET HIGH PERFORMANCE BUTTERFLY VALVES

2	15	L	06	C	S	P	8T	A	0
VALVE TYPE	CLASS	VALVE STYLE	SIZE	BODY MATERIAL	DISC MATERIAL	STEM & PIN MATERIAL	SEAT MATERIAL	SPECIAL SERVICE	OPERATOR
2 - DOUBLE OFFSET	15 (150)	L - LUG	02 (2")	**CARBON STEEL**	**STAINLESS STEEL**	P - 17-4 PH SS	8T - RTFM (TFM 1700 W/GLASS)	A - STANDARD APOLLO	0 - BARE STEM
	30 (300)	W - WAFER	25 (2.5")	C - A216 WCB	S - A351 CF8M (316 SS)				1 - LEVER OPERATOR[4]
	60 (600)[1]		03 (3")						2 - WORM GEAR OPERATOR
			04 (4")			A - ALLOY 20	2F - TFM/INCONEL, GRAPHITE SEALS (FIRE SAFE)		
			05 (5")	**STAINLESS STEEL**	A - A351 CN7M (ALLOY 20)	B - 317 SS			5 - WORM GEAR OPERATOR W/ CHAIN WHEEL
			06 (6")	S - A351 CF8M (316 SS)		H - HASTELLOY® C			
			08 (8")		B - A351 CG8M (317 SS)	J - DUPLEX	2M - 316SS (METAL SEATED)		
			10 (10")			K - SUPER DUPLEX			7 - LOCKING WORM GEAR OPERATOR
			12 (12")	A - A351 CN7M (ALLOY 20)	J - A995 CD3MN (2205 DUPLEX)		21 - UHMWPE[3]		
			14 (14")			M - MONEL®			8 - LOCKING WORM GEAR OPERATOR W/ CHAIN WHEEL
			16 (16")	B - A351 CG8M (317 SS)	K - A995 CD3MWCUN (2507 SUPER DUPLEX)	S - 316 SS			
			18 (18")						
			20 (20")	J - A995 CD3MN (2205 DUPLEX)					
			24 (24")						
			30 (30")[2]	K - A995 CD3MWCUN (2507 SUPER DUPLEX)	**NICKEL ALLOYS**				
			36 (36")[2]		H - A494 CW12MW (HASTELLOY® C)				
					M - A494 M-35-1 (MONEL®)				
				NICKEL ALLOYS					
				H - A494 CW12MW (HASTELLOY® C)					
				M - A494 M-35-1 (MONEL®)					

EXAMPLE: 215L06CSP8TA0 = 6" Class 150 Lug, Carbon Steel Body, SS Disc, 17-4 PH Stem, TFM 1700 Seats, Standard Service, Bare Stem

( ) Represents close wrought equivalent
[1] Class 600 valves available in sizes 3" through 12" (excluding 5" size)
[2] 215L Only
[3] UHMWPE not available in Class 600
[4] Standard handle can be locked in the full open or fully closed position.
Lever operators are available with 2"-12" class 150 valves (215), and 2"-10" class 300 valves (230)
See table for Lever Handle Availability & Maximum Differential Pressure

Safety Warning:

Gear operators are normally specified for larger high performance butterfly valves because the force of the pipeline flow on the disc can be too great to safely use a handle.

LEVER HANDLE AVAILABILITY & MAXIMUM DIFFERENTIAL PRESSURE

			SOFT SEAT (CODES: 8T & 21)		FIRE-SAFE SEAT (CODE: 2F)		METAL SEAT (CODE: 2M)	
			PSI	BAR	PSI	BAR	PSI	BAR
Class 150	215	2"-6"	Full Rating		Full Rating		Full Rating	
		8"	150	10.3	Not Available		Not Available	
		10"-12"	50	3.4	Not Available		Not Available	
Class 300	230	2"-4"	Full Rating		Full Rating		Full Rating	
		6"-8"	150	10.3	Not Available		Not Available	
		10"	50	3.4	Not Available		Not Available	

REV. 04MAY17